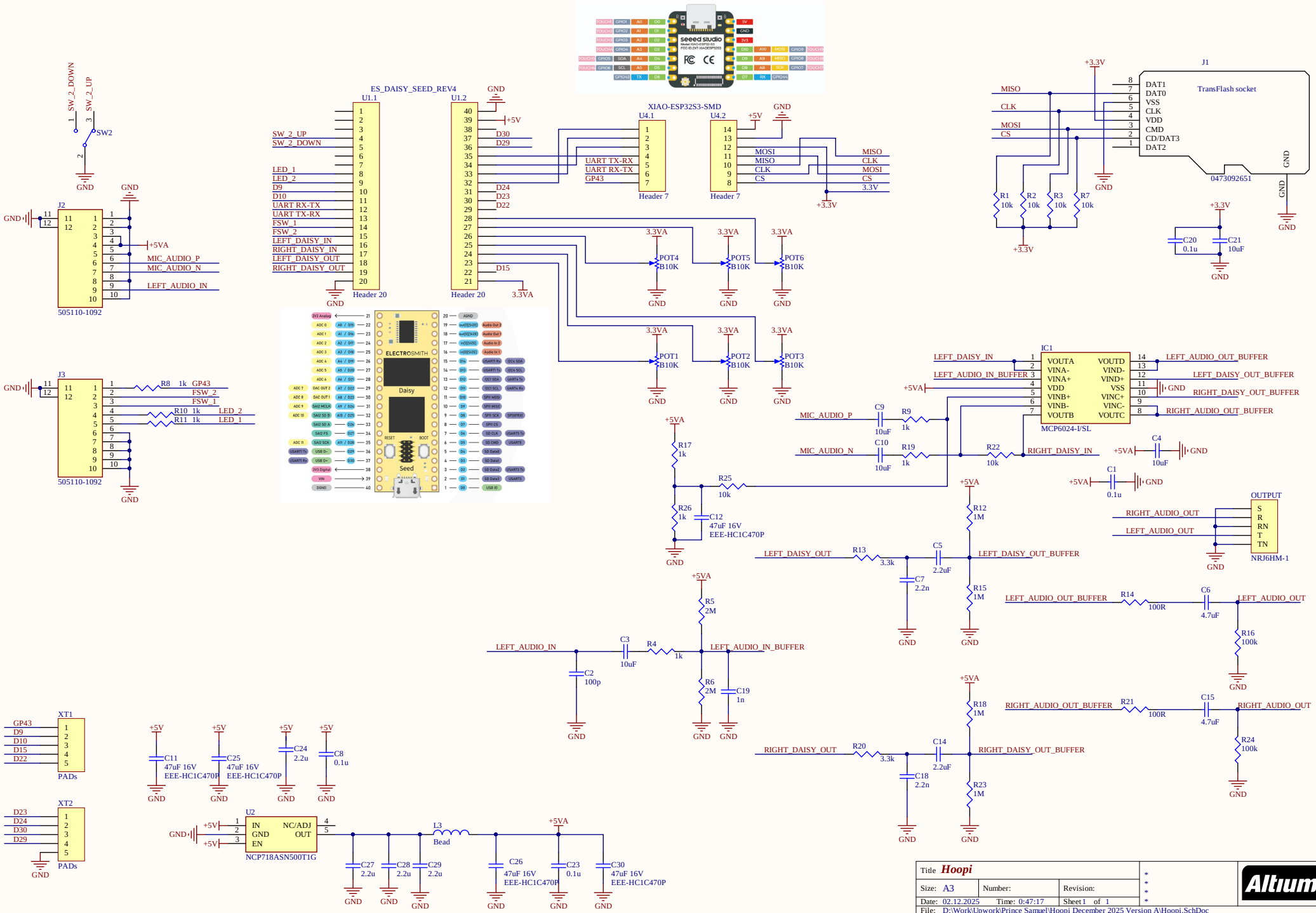
SW_2_DOWN
SW_2_UP
SW2
GND
J2
505110-1092
+5VA
MIC_AUDIO_P
MIC_AUDIO_N
LEFT_AUDIO_IN
J3
R8 1k GP43
FSW_2
FSW_1
R10 1k LED_2
R11 1k LED_1
ES_DAISY_SEED_REV4
U1.1
U1.2
Header 20
SW_2_UP
SW_2_DOWN
LED_1
LED_2
D9
D10
UART RX-TX
UART TX-RX
FSW_1
FSW_2
LEFT_DAISY_IN
RIGHT_DAISY_IN
LEFT_DAISY_OUT
RIGHT_DAISY_OUT
D30
D29
D24
D23
D22
D15
+5V
3.3VA
XIAO-ESP32S3-SMD
U4.1
U4.2
Header 7
UART TX-RX
UART RX-TX
GP43
MOSI
MISO
CLK
CS
3.3V
+3.3V
POT4 B10K
POT5 B10K
POT6 B10K
POT1 B10K
POT2 B10K
POT3 B10K
J1
TransFlash socket
DAT1
DAT0
VSS
CLK
VDD
CMD
CD/DAT3
DAT2
0473092651
R1 10k
R2 10k
R3 10k
R7 10k
C20 0.1u
C21 10uF
IC1
MCP6024-I/SL
VOUTA
VINA-
VINA+
VDD
VINB+
VINB-
VOUTB
VOUTD
VIND-
VIND+
VSS
VINC+
VINC-
VOUTC
LEFT_DAISY_IN
LEFT_AUDIO_IN_BUFFER
LEFT_AUDIO_OUT_BUFFER
LEFT_DAISY_OUT_BUFFER
RIGHT_DAISY_OUT_BUFFER
RIGHT_AUDIO_OUT_BUFFER
C9 10uF
R9 1k
C10 10uF
R19 1k
R22 10k
C4 10uF
C1 0.1u
R17 1k
R25 10k
R26 1k
C12 47uF 16V EEE-HC1C470P
R12 1M
R15 1M
R13 3.3k
C5 2.2uF
C7 2.2n
OUTPUT
NRJ6HM-1
RIGHT_AUDIO_OUT
LEFT_AUDIO_OUT
R14 100R
C6 4.7uF
R16 100k
R5 2M
R6 2M
C3 10uF
R4 1k
C2 100p
C19 1n
LEFT_AUDIO_IN
LEFT_AUDIO_IN_BUFFER
R18 1M
R23 1M
R20 3.3k
C14 2.2uF
C18 2.2n
R21 100R
C15 4.7uF
R24 100k
RIGHT_DAISY_OUT
RIGHT_DAISY_OUT_BUFFER
RIGHT_AUDIO_OUT_BUFFER
RIGHT_AUDIO_OUT
XT1
XT2
PADs
GP43
D9
D10
D15
D22
D23
D24
D30
D29
C11 47uF 16V EEE-HC1C470P
C25 47uF 16V EEE-HC1C470P
C24 2.2u
C8 0.1u
U2
NCP718ASN500T1G
IN
GND
EN
NC/ADJ
OUT
L3 Bead
C27 2.2u
C28 2.2u
C29 2.2u
C26 47uF 16V EEE-HC1C470P
C23 0.1u
C30 47uF 16V EEE-HC1C470P
Title Hoopi
Size: A3
Number:
Revision:
Date: 02.12.2025
Time: 0:47:17
Sheet 1 of 1
File: D:\Work\Upwork\Prince Samuel\Hoopi December 2025 Version A\Hoopi.SchDoc
Altium

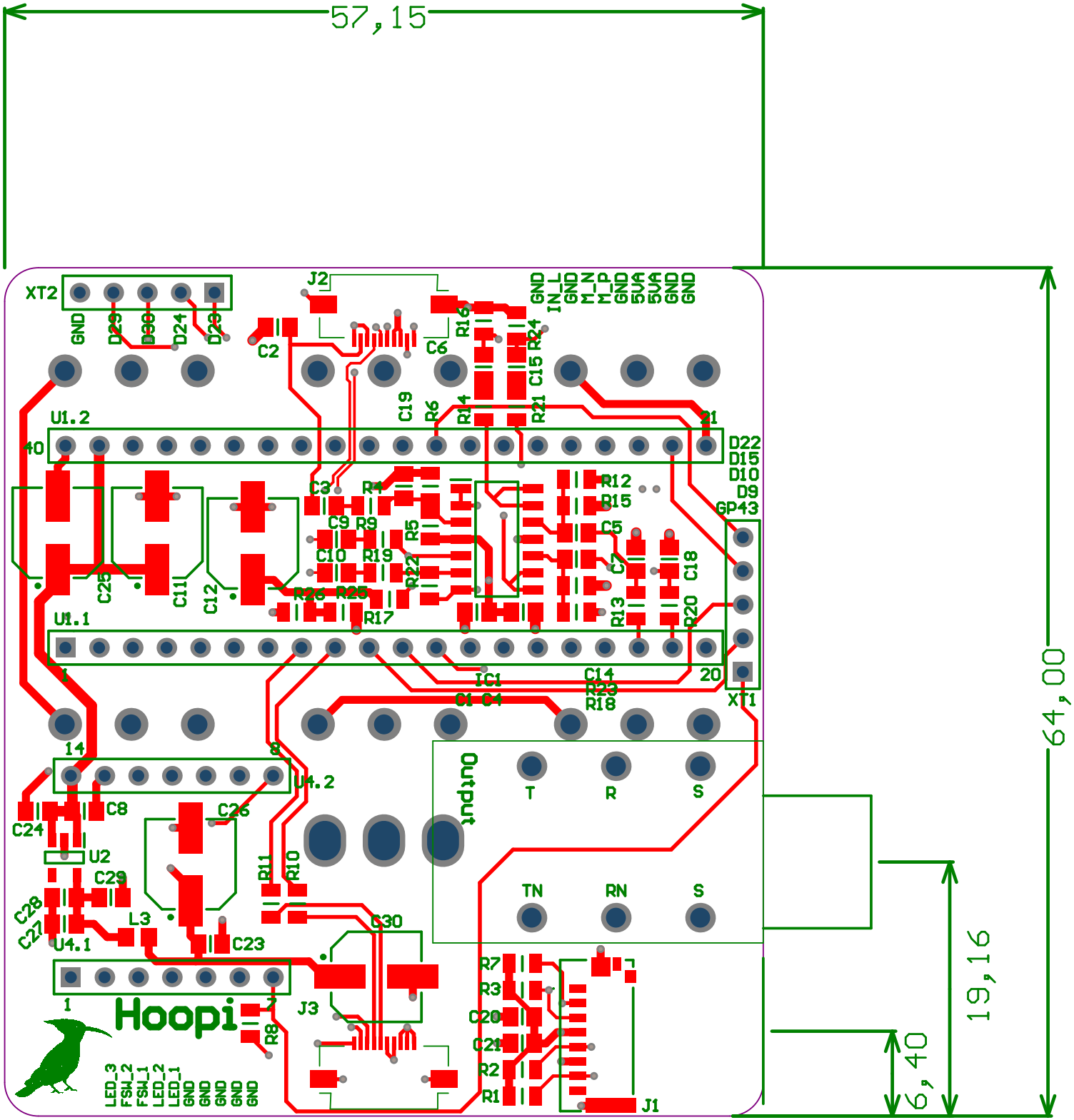
57,15
64,00
19,16
6,40
XT2
GND
D29
D30
D24
D23
J2
C2
C6
R16
R24
C15
GND
IN_L
GND
M_N
M_P
GND
5VA
5VA
GND
GND
U1.2
40
21
C19
R6
R14
R21
D22
D15
D10
D9
GP43
C3
R4
R12
R15
C9
R9
R5
C5
C10
R19
R22
C7
C18
C25
C11
C12
R26
R25
R17
R13
R20
U1.1
1
20
IC1
C14
R23
R18
C1
C4
XT1
14
8
U4.2
C8
C24
C26
U2
C29
R11
R10
C28
C27
L3
C23
C30
U4.1
1
J3
R8
Hoopi
LED_3
FSH_2
FSH_1
LED_2
LED_1
GND
GND
GND
GND
GND
Output
T
R
S
TN
RN
S
R7
R3
C20
C21
R2
R1
J1

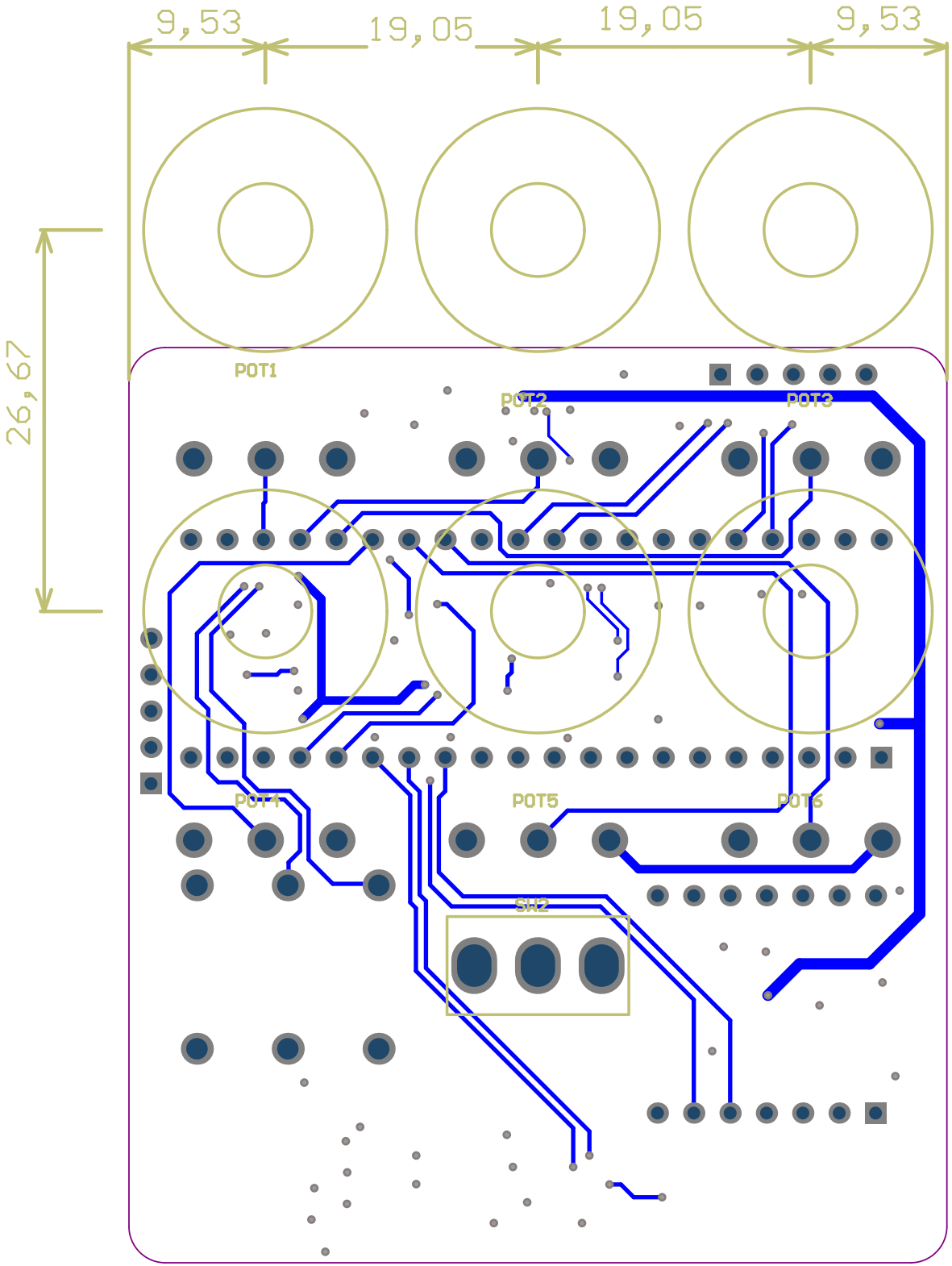
9,53
19,05
19,05
9,53
26,67
POT1
POT2
POT3
POT4
POT5
POT6
SW2

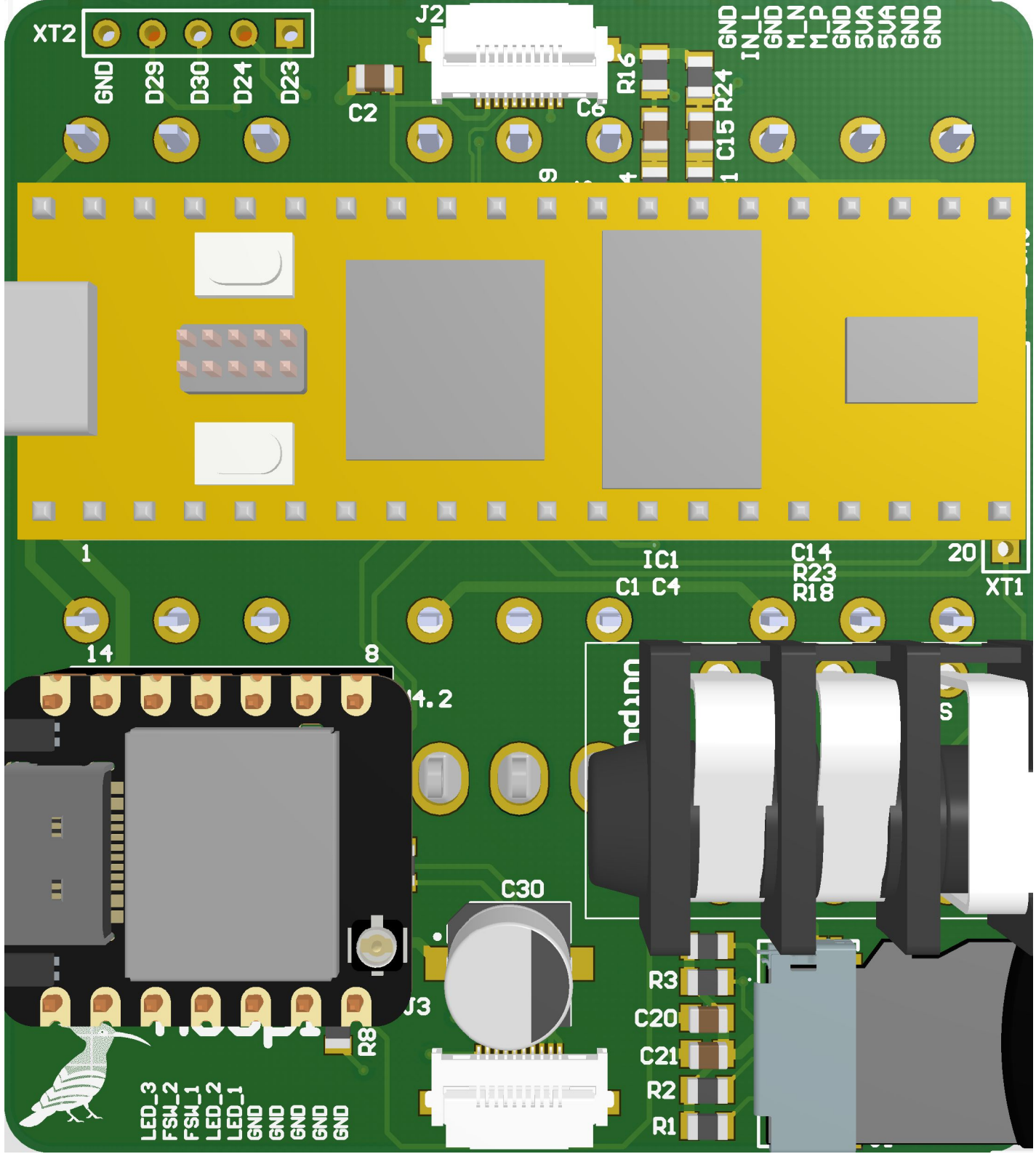
XT2
GND
D29
D30
D24
D23
J2
C2
C6
R16
R24
C15
GND
IN_L
GND
M_N
M_P
GND
5VA
5VA
GND
GND
1
IC1
C1 C4
C14
R23
R18
20
XT1
14
8
4.2
C30
J3
R8
R3
C20
C21
R2
R1
LED_3
FSW_2
FSW_1
LED_2
LED_1
GND
GND
GND
GND
GND

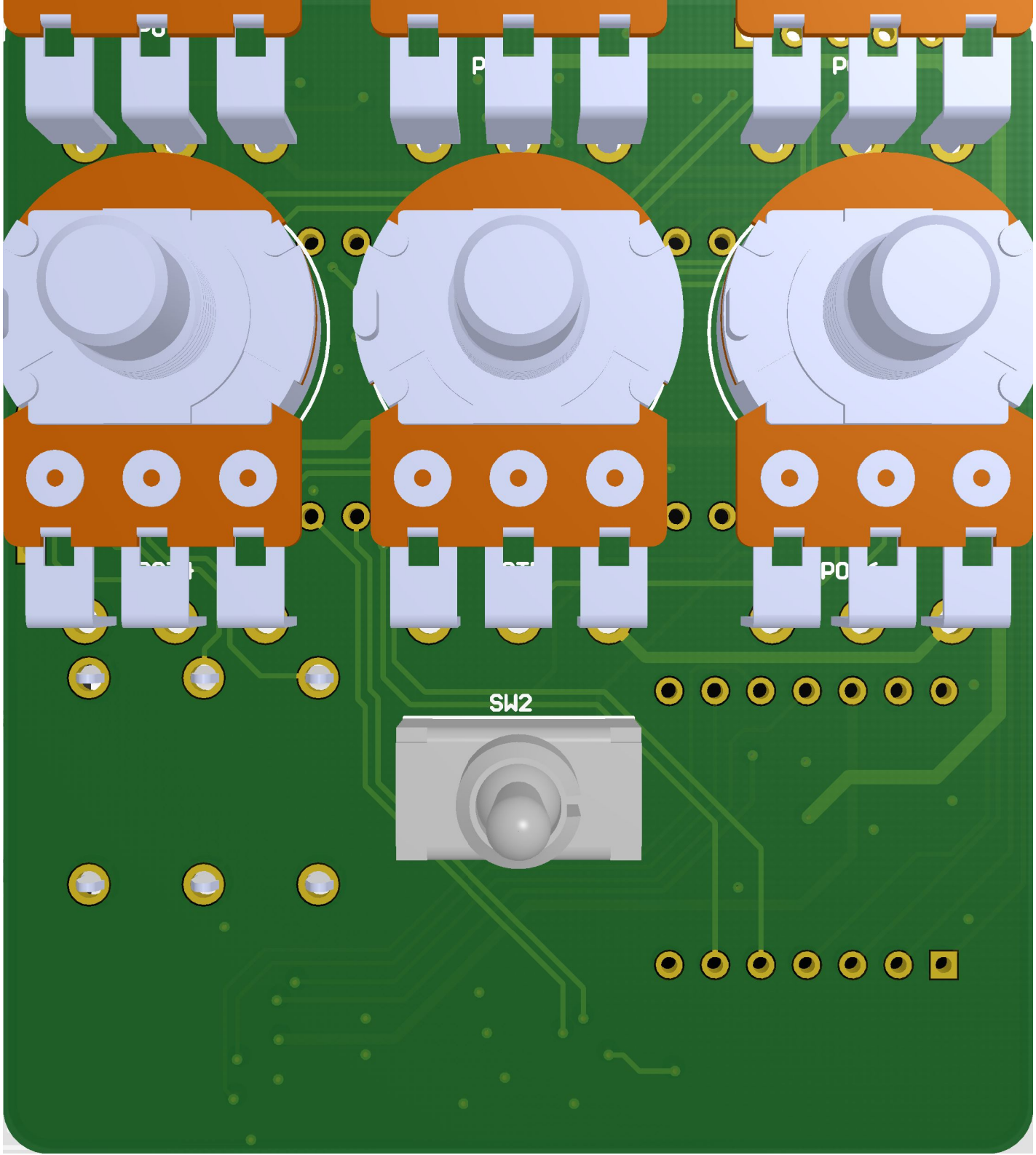
SW2

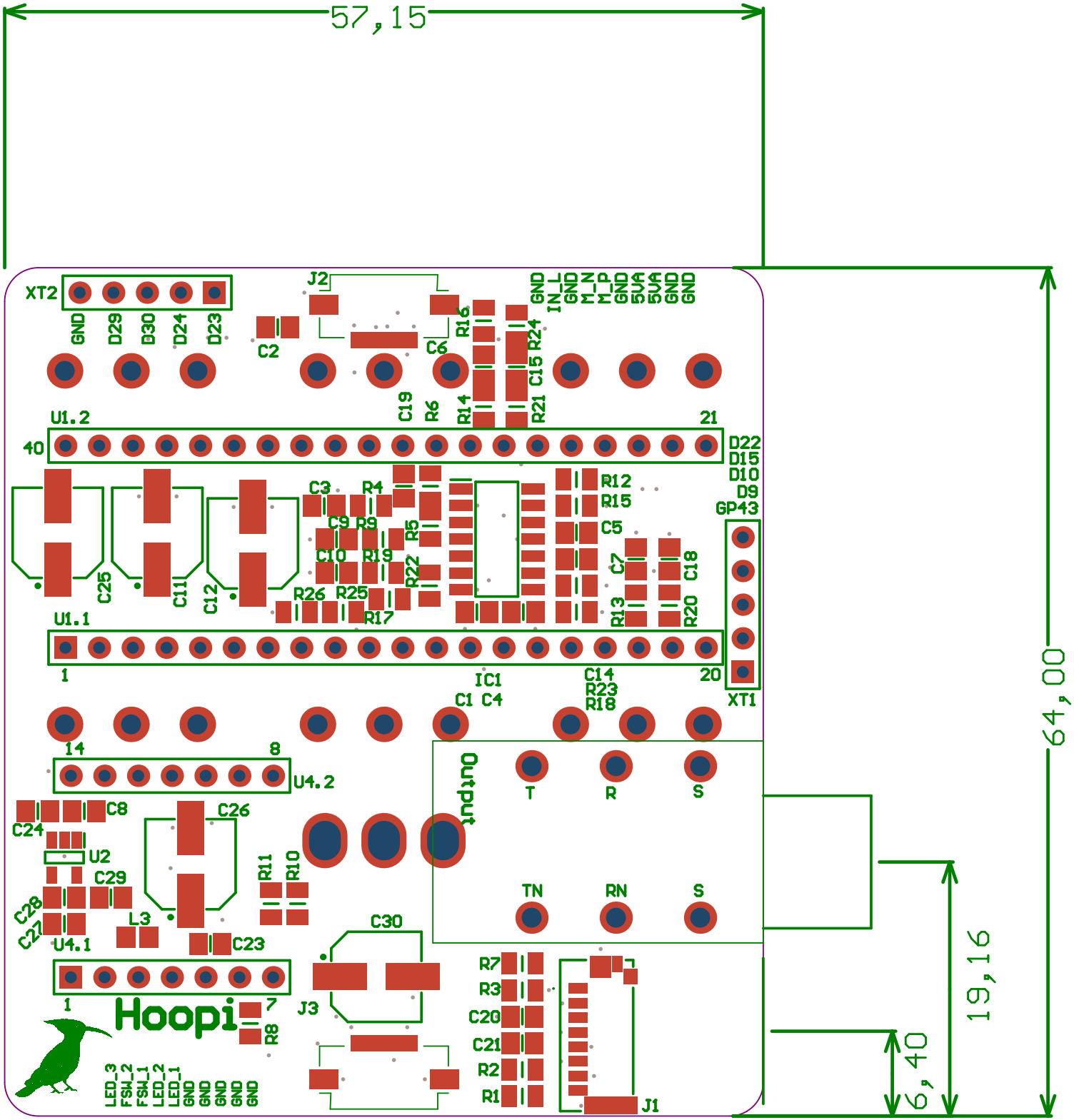
57,15
64,00
19,16
6,40
XT2
GND
D29
D30
D24
D23
J2
C2
C6
R16
R24
C15
R21
R14
R6
C19
GND
IN_L
GND
M_N
M_P
GND
5VA
5VA
GND
GND
U1.2
40
21
D22
D15
D10
D9
GP43
C3
R4
C9
R9
R5
C10
R19
R22
R26
R25
R17
R12
R15
C5
C7
C18
R13
R20
C25
C11
C12
U1.1
1
20
XT1
IC1
C1 C4
C14
R23
R18
14
8
U4.2
C8
C24
U2
C29
C28
C27
U4.1
L3
C26
R11
R10
C23
C30
J3
Output
T
R
S
TN
RN
S
R7
R3
C20
C21
R2
R1
J1
Hoopi
R8
LED_3
FSH_2
FSH_1
LED_2
LED_1
GND
GND
GND
GND
GND

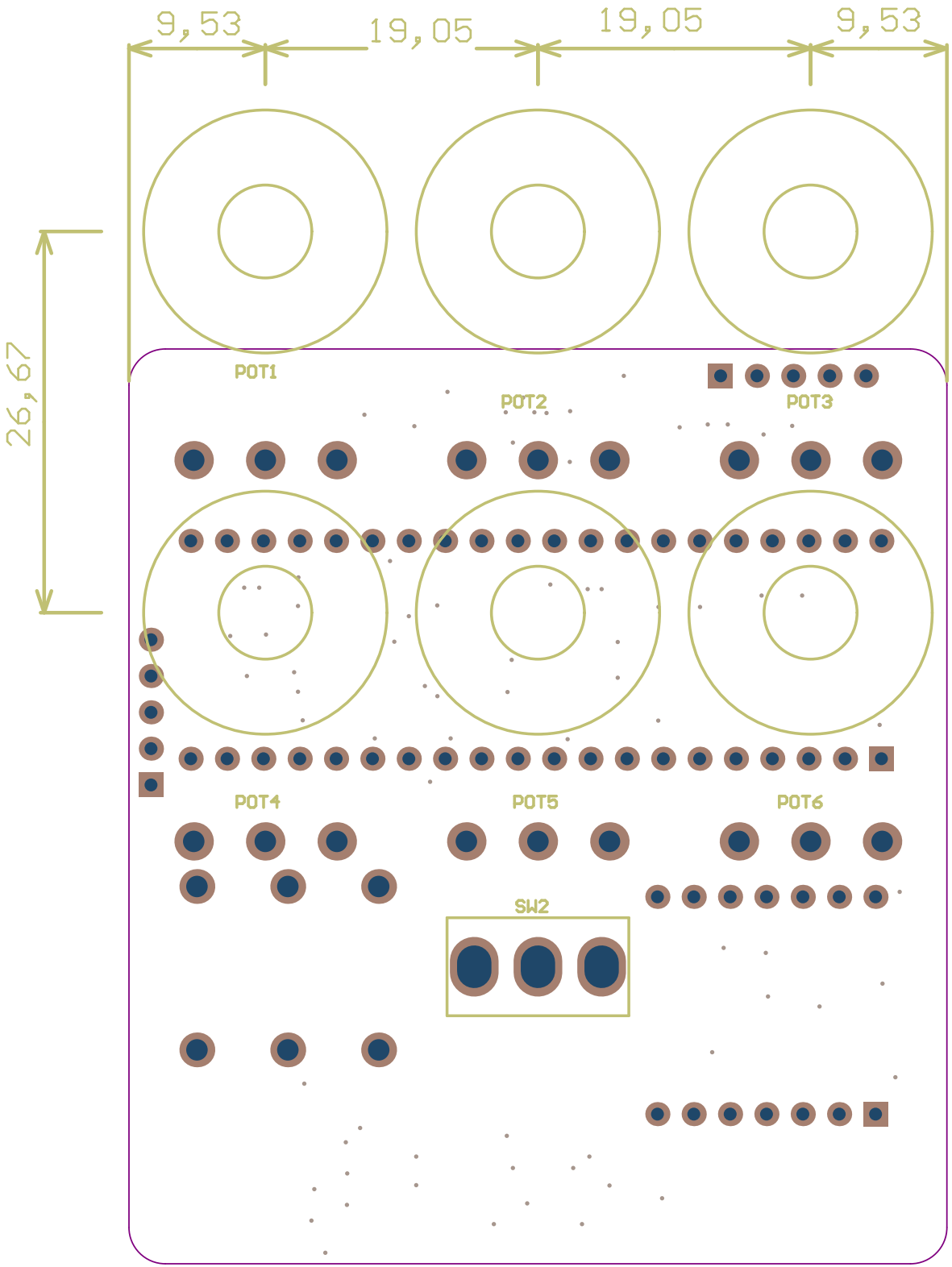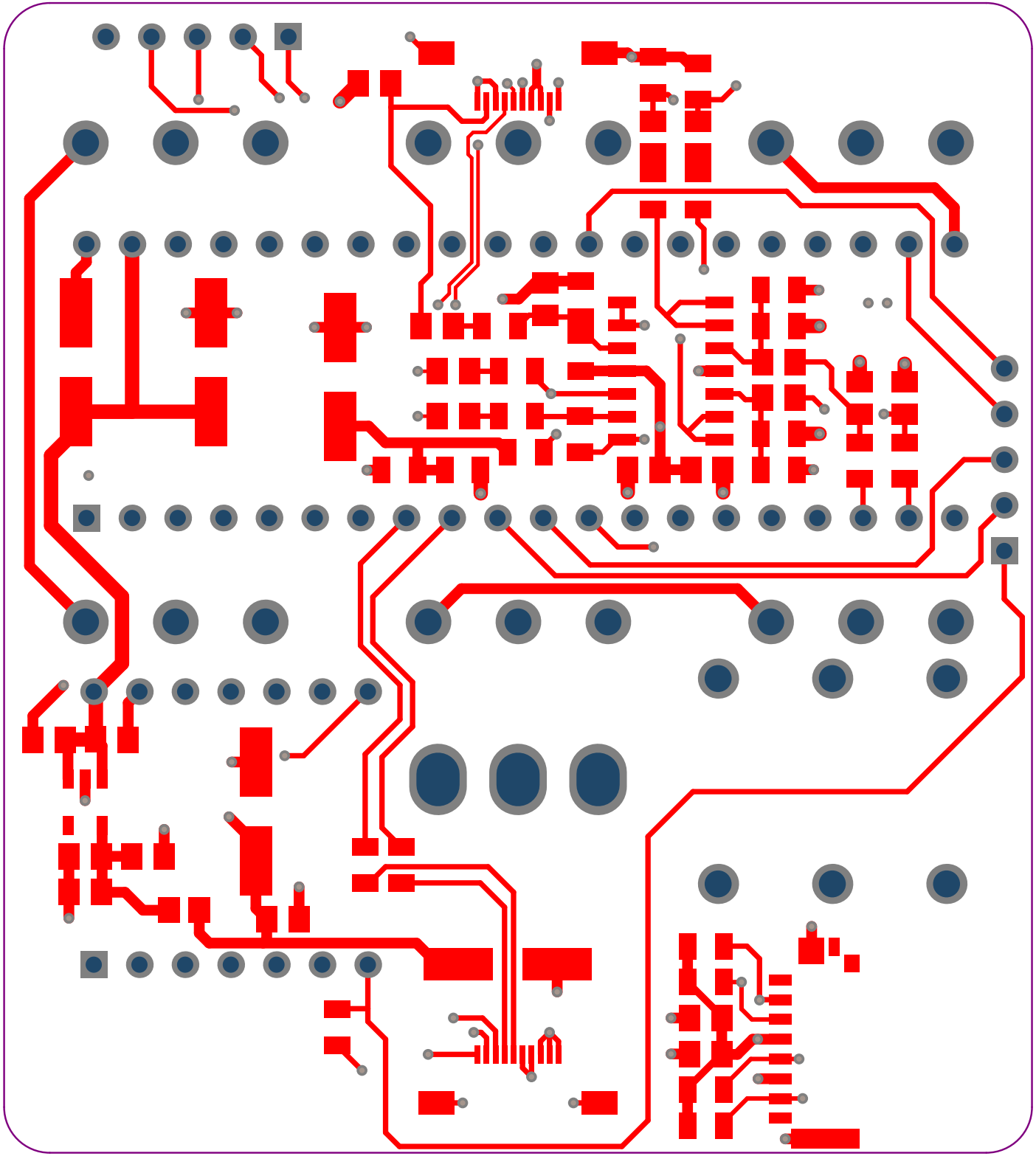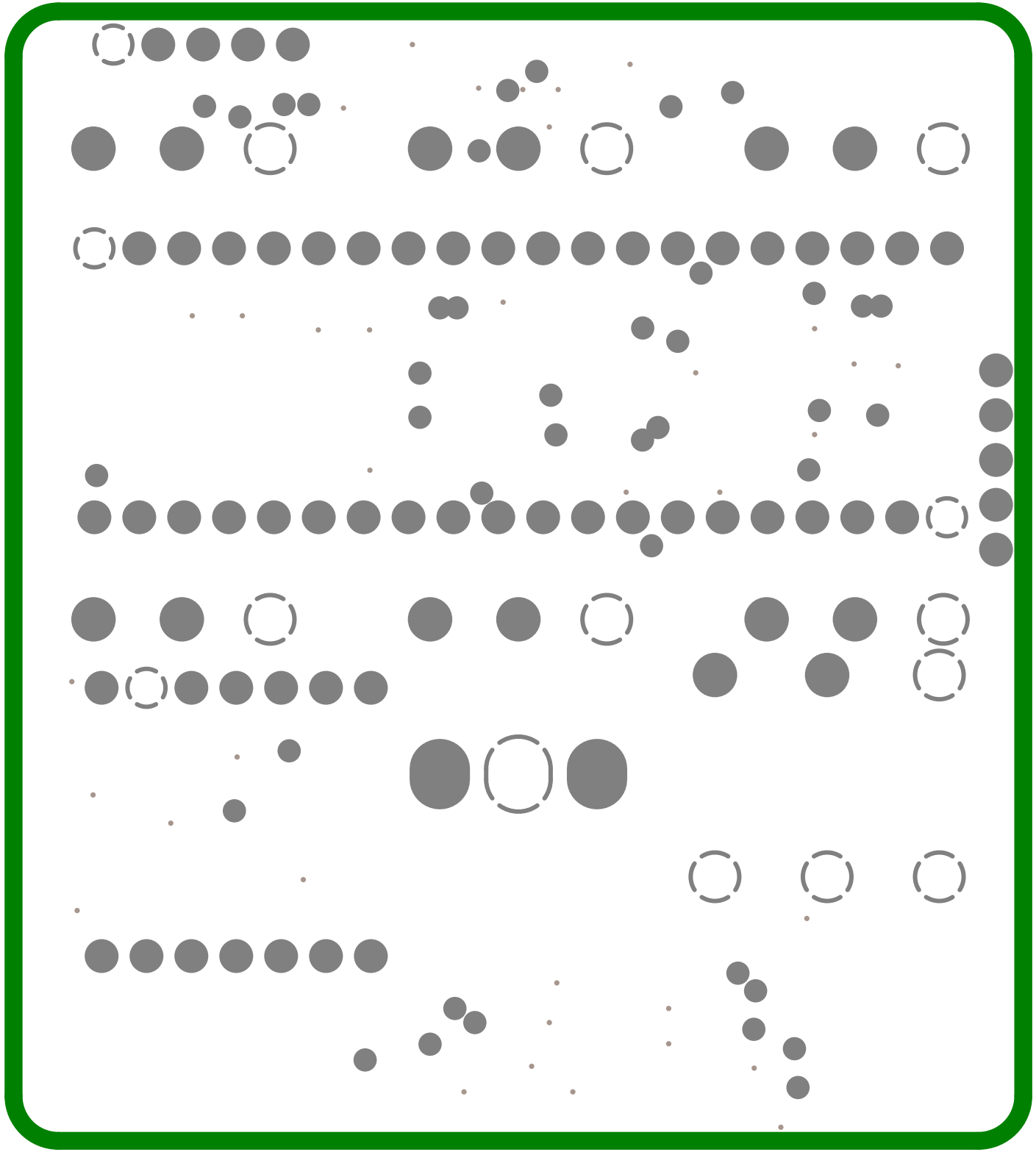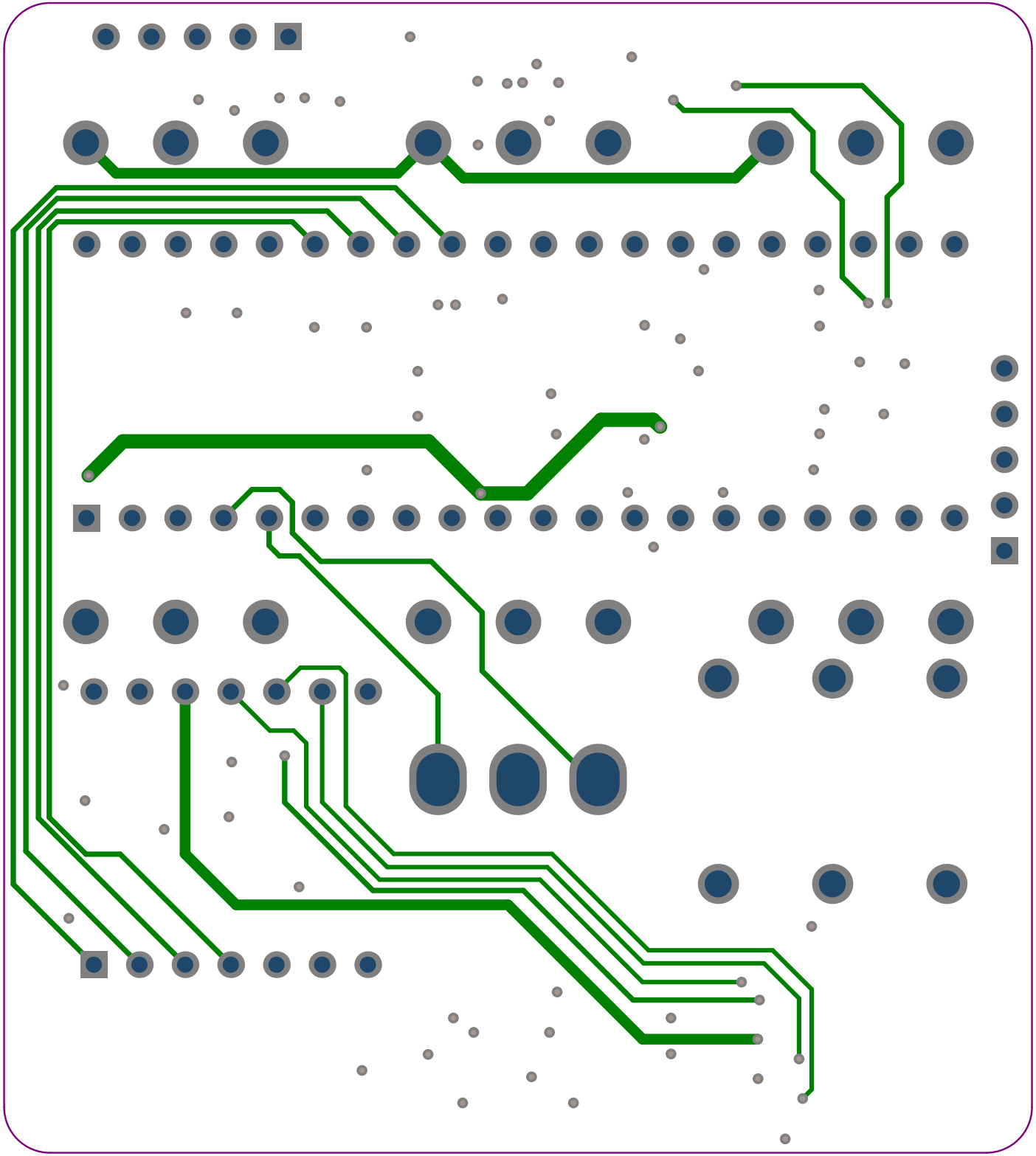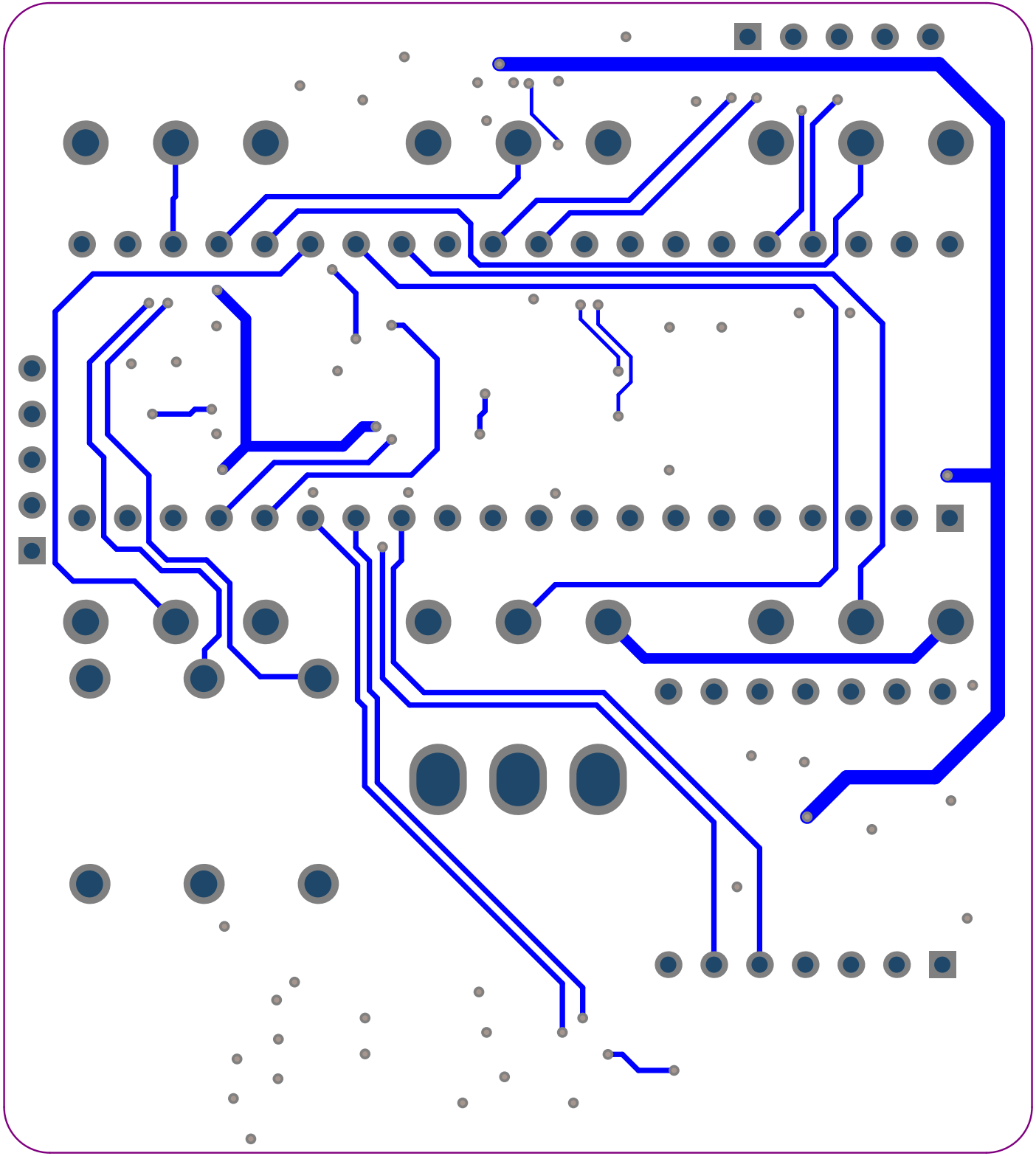
9,53
19,05
19,05
9,53
26,67
POT1
POT2
POT3
POT4
POT5
POT6
SW2